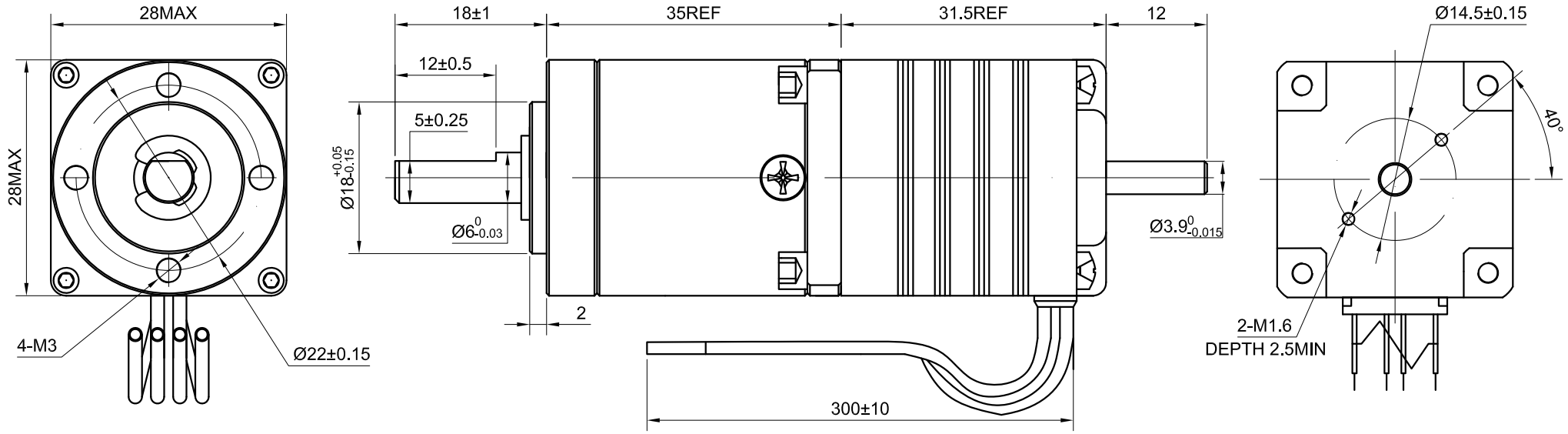

SPECIFICATION / CONNECTION	BIPOLAR
VOTAGE(VOC)	3.80
AMPS/PHASE	0.67
RESISTANCE/PHASE(Ohms)@25°C	5.60±10%
INDUCTANCE/PHASE(mH)@1KHz	4.20±20%
HOLDING TORQUE w/o GEARBOX(Nm)[lb-in]	0.06[0.53]
GEAR RATIO	$26\frac{103}{121}$
EFFICIENCY	81.00%
STEP ANGLE w/o GEARBOX(°)	1.80
BACKLASH@NO-LOAD	<=1°
MAX.PERMISSIBLE TORQUE(Nm)	3.00
MOMENT PERMISSIBLE TORQUE(Nm)	5.00
SHAFT MAXIMUM AXIAL LOAD(N)	5.00
SHAFT MAXIMUM RADIAL LOAD(N)	25.00
WEIGHT(Kg)[lb]	0.20[0.44]
TEMPERATURE RISE:MAX.80°C（MOTOR STANDSTILL;FOR 2PHASE ENERGIZED）	
AMBIENT TEMPERATURE -10°C~50°C[14°F~122°F]	
INSULATION CLASS B 130°C[266°F]	

TYPE OF CONNECTION (EXTERN)		MOTOR	
PIN NO	BIPOLAR	LEADS	WINDING
1	A —	BLK	A
2	A\ —	GRN	A\
3	B —	RED	B
4	B\ —	BLU	B\

FULL STEP 2 PHASE-Ex. ,
WHEN FACING MOUNTING END (X)

STEP	A	B	A\	B\	↓ CW	CCW ↑
1	+	+	-	-		
2	-	+	+	-		
3	-	-	+	+		
4	+	-	-	+		

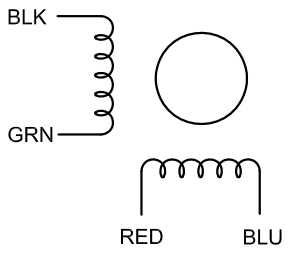

	APVD			STEPPER MOTOR
	CHKD			
1.5:1	DRN			11HS12-0674D1-PG27
SCALE	SIGNATURE		DATE	